Exploded

H3003 Seated Leg Press

please note :prats didn't demolitionde part and fast eners not listde on the introduction

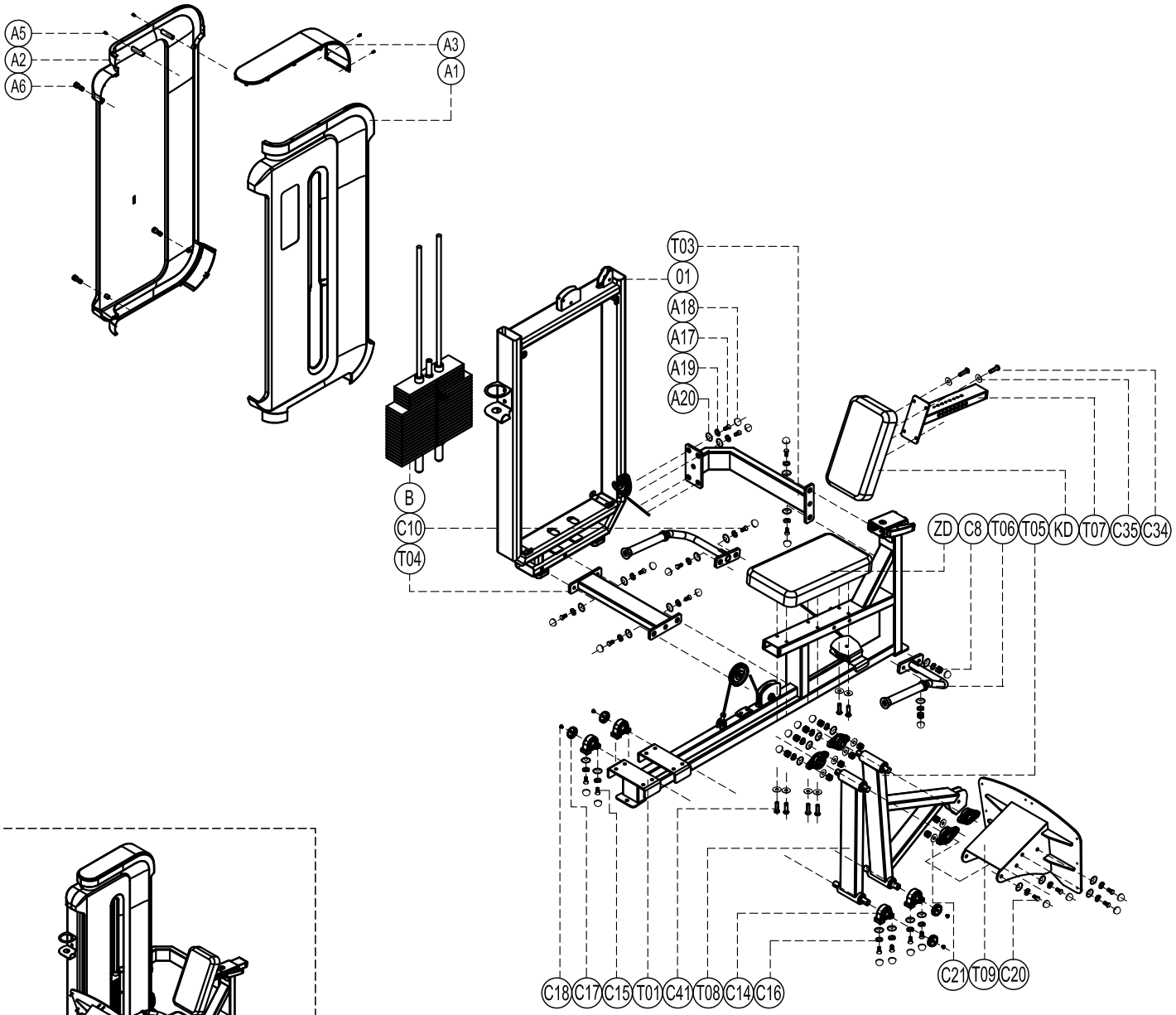

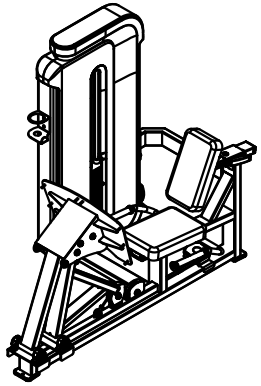

Number	Name	Quantity
C41	Cup head inner hex screw M8*80	6
C35	Flat washer φ8	10
C34	Cup head inner hex screw M8*35	4
C21	Flat washer φ12	8
C20	Outer hex screw M12*40	8
C19	Bearing basement UCFL205	4
C18	Sink inner hex screw M6*10	4
C17	Cover S264	4
C16	Spring washer φ10	8
C15	Outer hex screw M10*20	8
C14	Bearing basement UCPA205	4
C10	Outer hex screw M12*140	2
C8	Self lock nut M12	2
A20	Gasket DQ003	22
A19	Spring washer φ12	22
A18	Screw cap S208	22
A17	Outer hex screw M12*35	10
A6	Cup head inner hex screw M5*15	8
A5	Cup head cross tapping screw ST3*8	4
A3	Top cover	1
A2	Back shroud	1
A1	Front shroud	1
KD	Backrest DZ201	2
ZD	Seat	1
09	Pedal support set	1
08	Movable arm set	1
07	Cushione adjustment	1
06	Handle	2
05	Back connection set	1
04	Horizontal connection set	1
03	Top connector	1
02	Door frame	1
01	Main frame	1